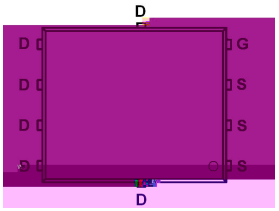
D
D
D
D
D
G
S
S
S
D

-
-
-
-
-

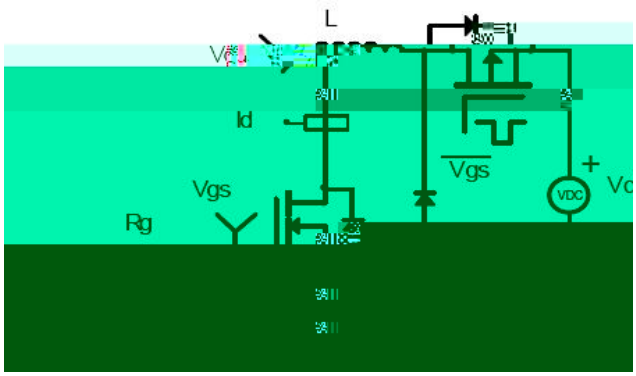
L
Id
Vgs
Rg
Vgs
VDC

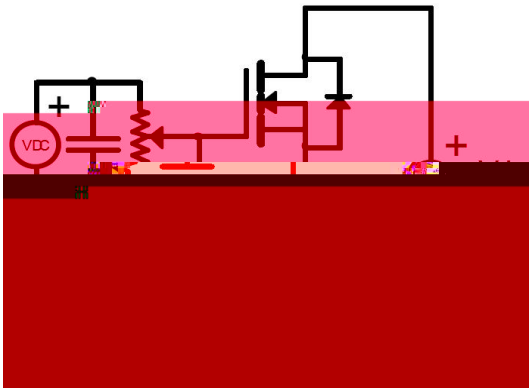
VDC

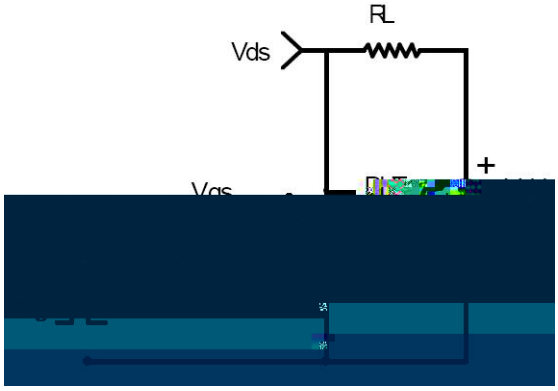
RL
Vds

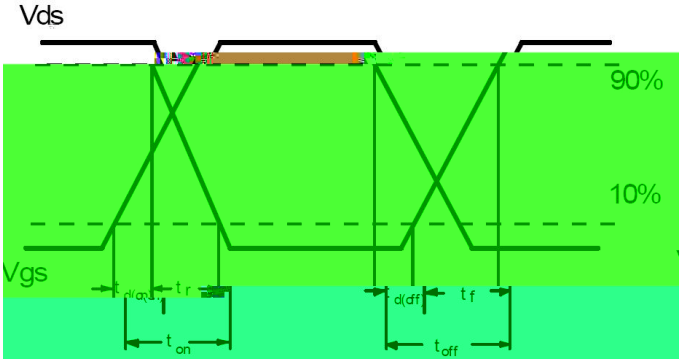
Vds
90%
10%
Vgs
tr
tf
ton
toff

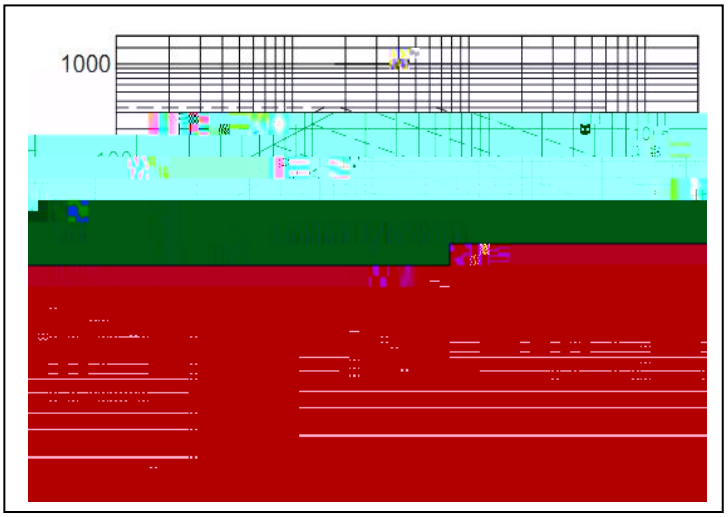
1000

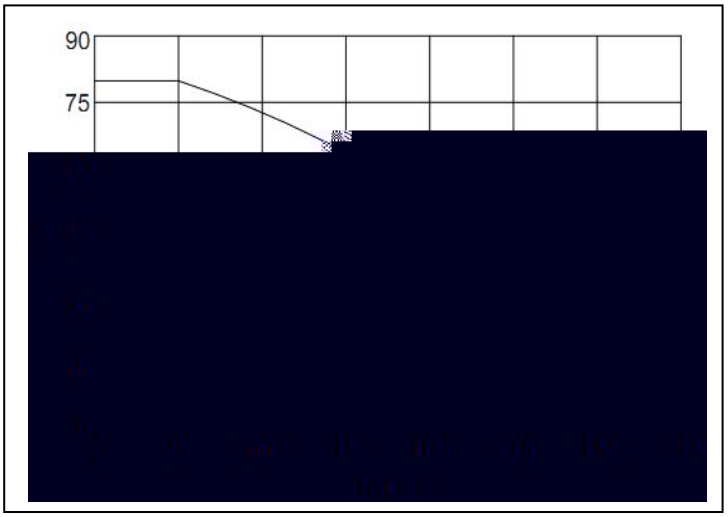
90
75

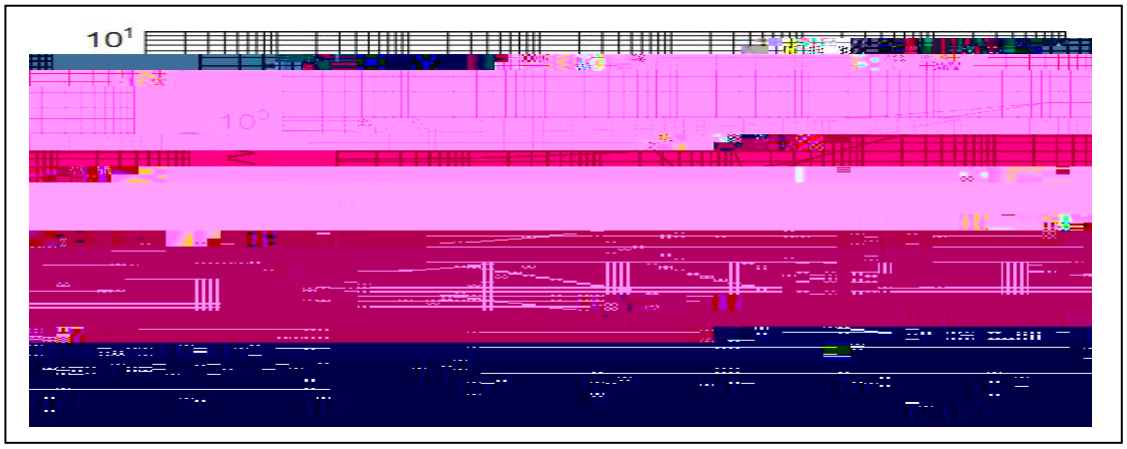
10^1
10^0

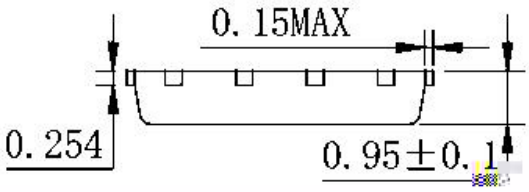
0. 15MAX
0. 254
0. 95±0. 1

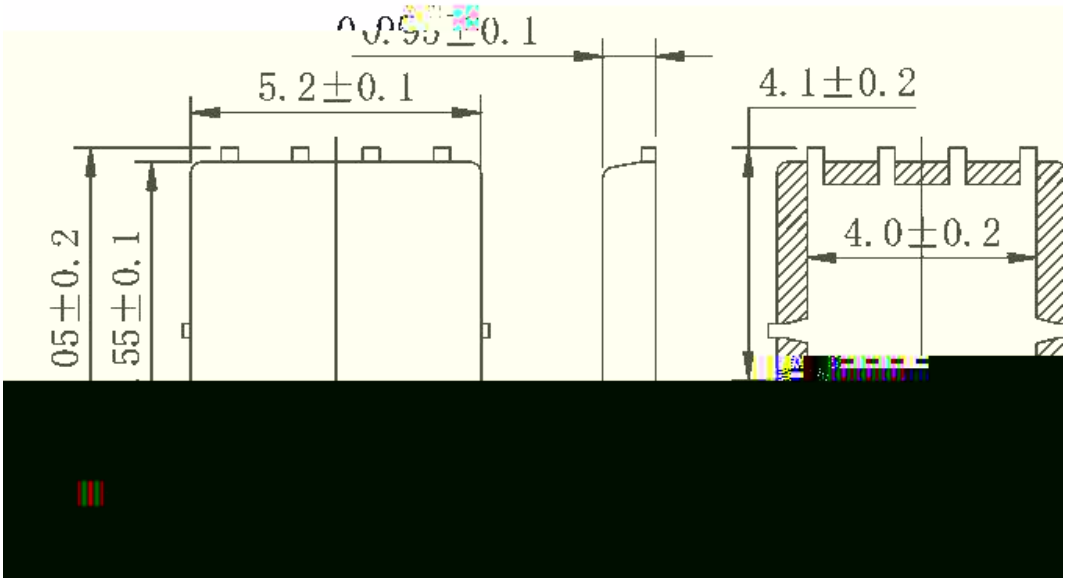
0. 95±0. 1
5. 2±0. 1
4. 1±0. 2
4. 0±0. 2
05±0. 2
55±0. 1